Crystal Units
Surface Mount Leaded Type CX49GFWB (CX-49G)

KYOCERA

for Consumer Products

Pb Free

RoHS Compliant

Features

- Crystal unit for Consumer Products
- Metal package, leaded type
- A resistance weld hermetic sealed type
- Suitable for high density assembly and mass production
- Also compatible with automotive applications

Applications

- Digital Electronics
- Consumer Products
- Car audio and accessories

How to Order

CX49GFWB 03579 □□ □ □ □ □□

① ② ③ ④ ⑤ ⑥ ⑦

① Series ② Frequency

③ Load Capacitance

H0	12 pF	Std.

④ Frequency Stability

P	$\pm 50\times10^{-6}$	Std.

⑤ Operating Temp. Range ⑥ Frequency Temp. Stability

ES	−10 to +70°C	$\pm 50\times10^{-6}$	Std.

⑦ Individual Specification

Specifications

Item	Symbol	Specification		Units	Remarks
Frequency Range	f_{nom}	3200 to 33999	30 to 60 (MHz)	kHz	
Overtone Order	OT	Fundamental	3rd. Overtone	—	
Load Capacitance	CL	12		pF	
Frequency Stability	f_{tol}	±50		$\times10^{-6}$	25°C±3°C
Motional Series Resistance	R1	Table 1		ohm	
Drive Level	DL	Table 2		μW	
Operating Temp. Range	T_{use}	−10 to +70		°C	
Storage Temp. Range	T_{stg}	−40 to +85		°C	
Frequency Temp. Characteristics	f_{tem}	±50		$\times10^{-6}$	Freq. deviation from the value at 25°C

∗ Please contact us for other specifications.

Table1 Motional Series Resistance

Frequency Range	Motional Series Resistance
3200 to 3499kHz	300Ω max.
3500 to 4099kHz	150Ω max.
4100 to 4799kHz	120Ω max.
4800 to 4999kHz	100Ω max.
5000 to 7999kHz	80Ω max.
8000 to 11999kHz	60Ω max.
12000 to 33999kHz	50Ω max.
*34 to 34.9MHz	150Ω max.
*35 to 60MHz	100Ω max.

∗ 3rd Overtone

Table2 Level of Drive

Frequency Range	Level of Drive
3200 to 15999kHz	10μW (500μW max.)
16000 to 24999kHz	10μW (300μW max.)
25000 to 33999kHz	10μW (100μW max.)
30 to 60MHz	10μW (300μW max.)

Typical Frequencies and Part Numbers

Frequency (kHz)	Part Number
3200.000	CX49GFWB03200H0PESZ1
3579.545	CX49GFWB03579H0PESZ1
3686.400	CX49GFWB03686H0PESZ1
4000.000	CX49GFWB04000H0PESZ1
4194.304	CX49GFWB04194H0PESZ1
4332.000	CX49GFWB04332H0PESZ1
4433.619	CX49GFWB04433H0PESZ1
4500.000	CX49GFWB04500H0PESZ1
4915.200	CX49GFWB04915H0PESZ1
6000.000	CX49GFWB06000H0PESZ1
6144.000	CX49GFWB06144H0PESZ1
7200.000	CX49GFWB07200H0PESZ1
7372.800	CX49GFWB07372H0PESZ1
8000.000	CX49GFWB08000H0PESZ1
10000.000	CX49GFWB10000H0PESZ1
10738.635	CX49GFWB10738H0PESZ1
11000.000	CX49GFWB11000H0PESZ1
11059.200	CX49GFWB11059H0PESZ1
12000.000	CX49GFWB12000H0PESZ1
12288.000	CX49GFWB12288H0PESZ1
13500.000	CX49GFWB13500H0PESZ1
14318.180	CX49GFWB14318H0PESZ1
16000.000	CX49GFWB16000H0PESZ1
16934.400	CX49GFWB16934H0PESZ1
17280.000	CX49GFWB17280H0PESZ1
17734.476	CX49GFWB17734H0PESZ1
20000.000	CX49GFWB20000H0PESZ1
21477.270	CX49GFWB21477H0PESZ1
24000.000	CX49GFWB24000H0PESZ1
24576.000	CX49GFWB24576H0PESZ1
25000.000	CX49GFWB25000H0PESZ1
27000.000	CX49GFWB27000H0PESZ1

Dimensions

(Unit: mm)

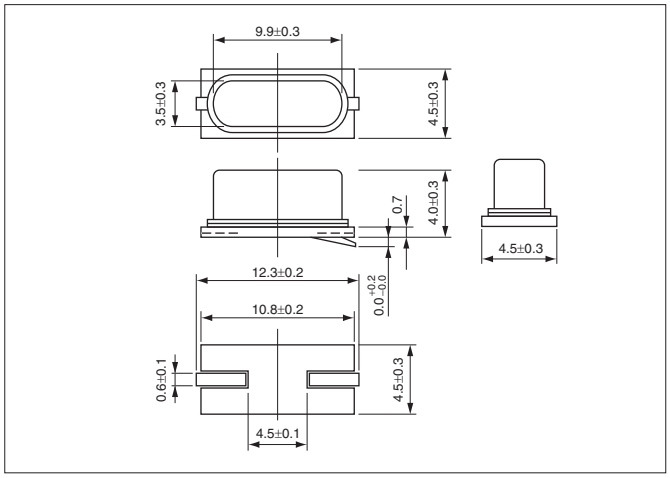

Recommended Land Pattern
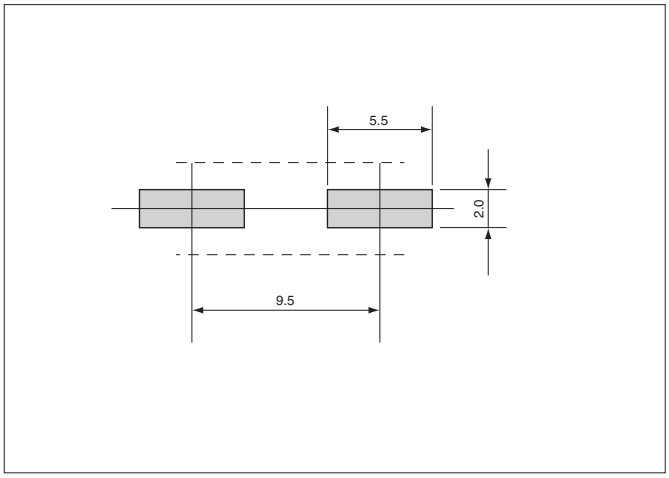
(Unit: mm)